ENERSINE™ APF

THE NEW GENERATION OF MODULAR ACTIVE FILTERS FOR HARMONICS & REACTIVE CURRENT COMPENSATION

Rack-Mount Frame System

Key Features
- Modular and Scalable System Architecture.
- Universal Voltage: 208V/400V/480V without Transformer.
- Harmonic compensation for 3-wire or/and 4-wire system.

Powerful Performance
- Eliminates harmonics current from 2nd to 51st order.
- Close / Open Loop Selectable Control.
- Ultra-fast response to load changes within milliseconds.
- Load balancing between phases and unload neutral wire.
- Programmable Harmonics Compensation and Power Factor Correction.

Expandable Capabilities
- Space-saving high power density design.
- Different rated current filter system can wired in Parallel with common coupling CT.

Easy to control
- HMI utilising 7inch Coloured LCD Touch Screen for advanced control and monitoring.

Typical Application
- Data centers, semiconductor and electronics manufacturers.
- Chemical industry, Oil and gas, Steel plants.
- Water treatment plants, Automotive industry.

every moment counts

Operating Principle

Enersine™ APF measures and monitors the entire load current through external auxiliary coupling current transformers (CT) mounted on the AC line, removes the fundamental frequency component and injects opposite phase harmonic current to cancel harmonic current in the electrical distribution system. By canceling the harmonic currents in the circuit, there will be:

(1) No risk of harmonic resonance;
(2) Significantly reduce the voltage waveform distortion;
(3) Reduced voltages drop and temperature rise on transformers & cables;
(4) Improved power factor.

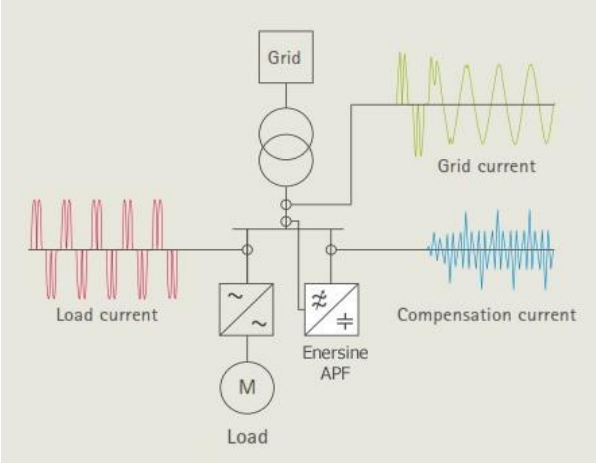

Numerous Connection Options

External auxiliary coupling current sensing transformers (CT) are the essential components in all active filter applications and generally all Active Filters are classified as source sensing or load sensing types depending on the point of coupling of the auxiliary CT.

Enersine™ APF is designed to have selective CT sensing configurations and numerous connection options. Different rated current of Enersine™ APF can be wired in parallel while connecting to the common external auxiliary coupling CT.

SOURCE SENSING (Close Loop)
Source-sensing require the external auxiliary CT to be coupled at the input supply source common to both the active harmonic filter and the harmonic generating equipment.

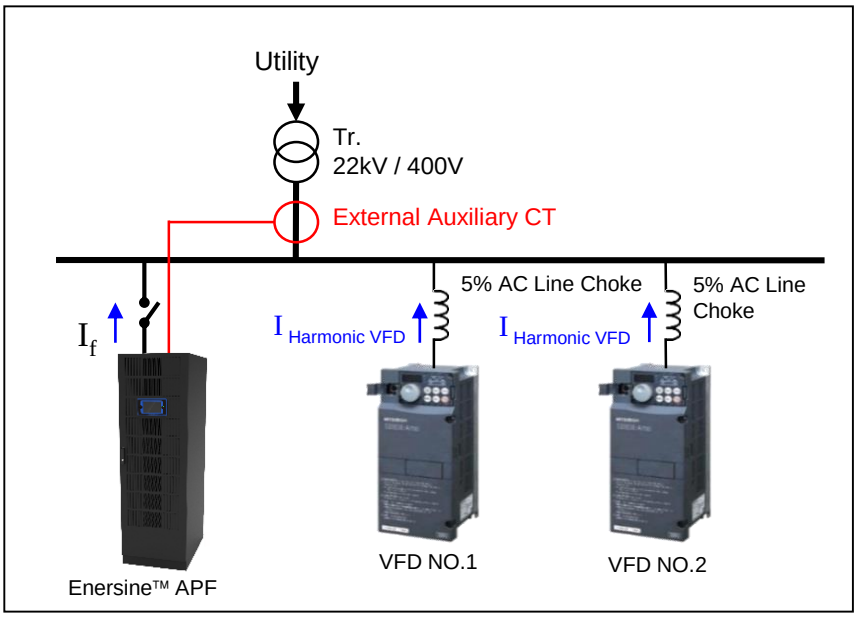

LOAD SENSING (Open Loop)
Load-sensing require the external auxiliary CT to be located nearest to the point of common coupling in the direction of the harmonic generating equipment.

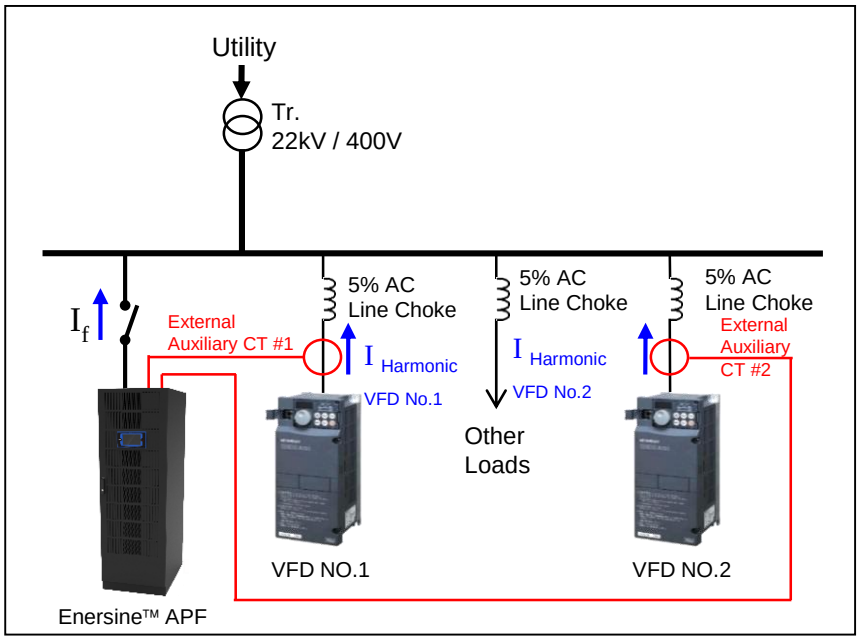

Intuitive Human Machine Interface

Enersine™ APF is equip with an intuitive Human Machine Interface (HMI), including a 7inch Coloured LCD Touch Screen, direct control and access to all parameters, waveforms and spectrums for management of both APF and system power quality.

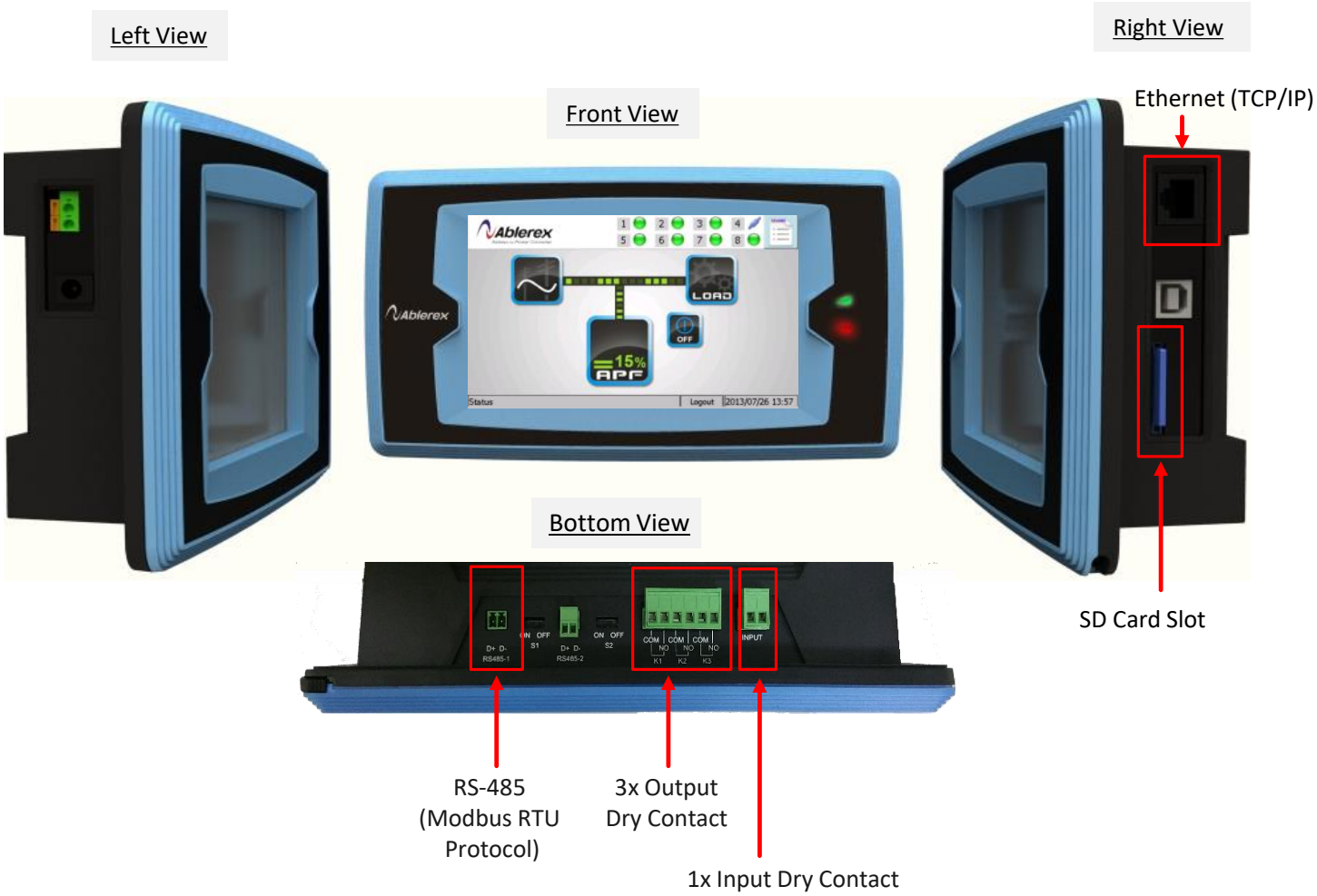

Benefits of the 7inch Coloured LCD Touch Screen includes:

-Display filters parameters and functions without additional devices.
-Clear menu structure and display data in both tables and diagrams.
-Simple programming of filter function with input instruction.
-SD memory card records the system's operating statues and event logs.
-Intuitive operation and password protection.
-Waveforms are display side by side making it easy to compare and identify sinusoidal current and output current of the active filter

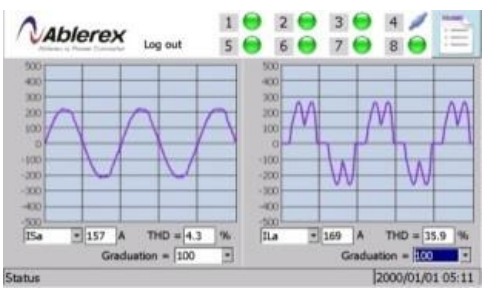

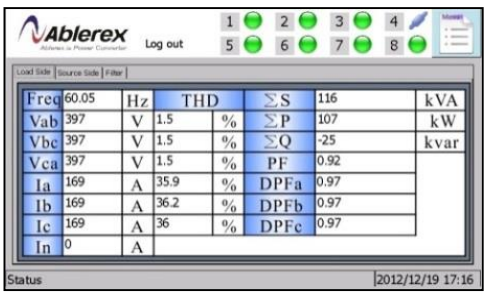

Modular & Scalable Architecture

Modularity principle: Maximum scope for extension

The compensation power electronics consisting 3-Level IGBT are housed in compact enclosed modules with speed controlled cooling fans for thermal dissipation. These power modules (PM) each $80A_{RMS}$ rated are equip with live hot-plug connectors for ease of configuration and frame integration.

The compensation power can be sized accordingly and gradually extended using additional power modules (PMs) and frames. Standardizing the components ensures short delivery time and cost effectiveness.

The modular structure makes the Enersine™ APF series resilient to errors. Should a PM fails, the other PMs continue to function until the error is rectified. Installation and maintenance are much easier with hot plug-in operation and front fan replacement. Reduced downtime with MTTR of less than 120 minutes.

Rack Mounted Modules in Frame

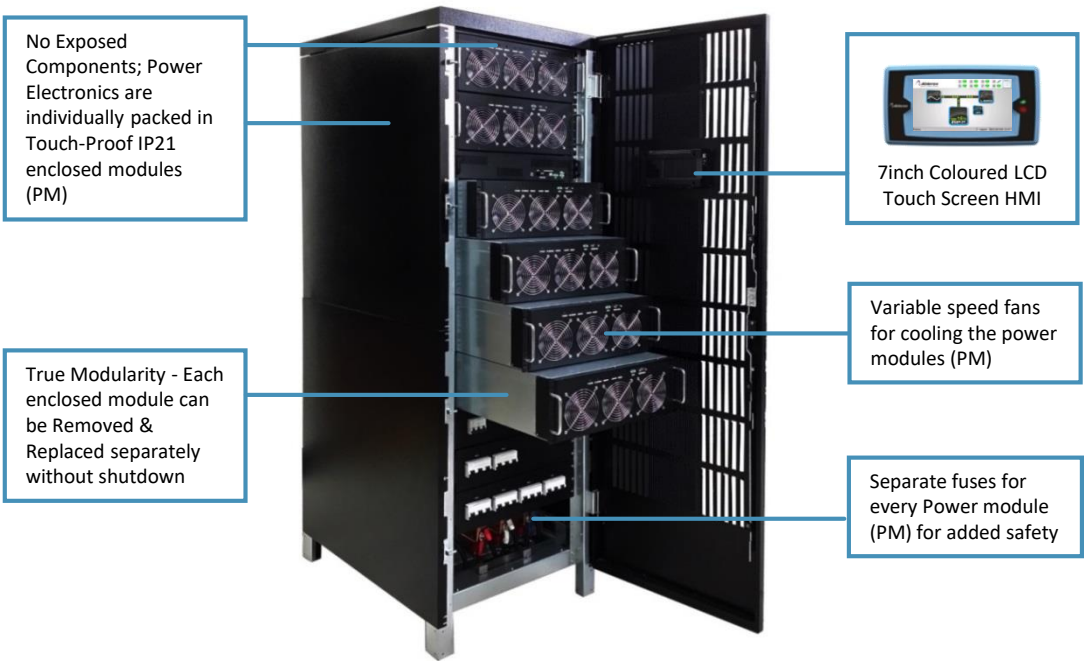

Expandable Capabilities:
Different Rated Current Filter System can be wired in parallel

The frame system features a precise modular design, and power modules (PM) are configured seamlessly in one frame. The frame system can be parallel and supplied accordingly to various application environment, and different Rated Current Filter Systems can be applied in parallel according to requirements.

- Operation up to 40°C ambient temperature at full compensation without derating.
- Rated current can be extended from 80A to 1,920A per Filter Systems.
- Modular concept: up to six power modules per frame.
- Extremely Low losses.
- Dynamic compensation of reactive power, harmonics, and flicker, as well as load balancing in one frame.

Technical Specification – Rack-Mount Frame System

Maximum Compensating Current Per Phase	$80A_{RMS}$ per power module	
Maximum Neutral Compensating Current	3 times of Phase Current (exclude 480V version)	
Maximum Scalable Current Per System	$1{,}920A_{RMS}$ (24nos. × $80A_{RMS}$ power module); Multiple systems can operate in parallel to increase capacity.	
Nominal Operating Voltage	208V - 400V	480V
Voltage Tolerance	+15%, -20%	+10%, -20%
Phase/Wires	3 phase 3 wires or 4 wires	3 phase 3 wires only
Nominal Frequency	50/60Hz ± 5% (Auto Sensing)	
Compensated Harmonic Orders	Global Mode: From 2nd to 51st order, including Even orders Selective Mode : Up to 30 orders simultaneously	
Harmonic Attenuation Factor (I_H(source)/I_H(load))	Typical ≥ 97% at rated load	
Power Factor Correction (Reactive Current)	Power factor correction is programmable from 0.6 lagging to 0.6 leading	
Load Balancing	Both phase to phase and phase to neutral	
Programmable Filtering Mode	1. Harmonic compensation only. 2. Power Factor (Reactive Current) compensation only 3. Harmonic compensation priority + Power Factor compensation 4. Power Factor compensation priority + Harmonic compensation 5. Harmonic compensation priority + Power Factor compensation + Load Balancing	
CT Ratio	Programmable Primary Current: 100A~10000A Programmable Secondary Current: 1A/5A	
CT Location	Source Side: Close Loop Control or Load Side: Open Loop Control	
Response Time	Harmonic Compensation <1ms, Reactive Current Injection <20ms	
Inrush Current	Less than rated current	
Current Limitation	Yes, at full correcting	
Maximum Heat losses	≤3% at full capacity	
Compensation Ratio	10:1 typical	
Power Electronics	3-Level IGBT Technology	
Cooling	Forced air cooling with speed-controlled fans	
Noise Level	<65 dBA	
Interfaces	Ethernet (TCP/IP), RS-485 (Modbus RTU Protocol), USB, 3x Output Dry Contact and 1x Input Dry Contact, 1x EPO	
EMC Class Compliance	EN 55011, EN 61000-6, EN 61000-3, EN 61000-4	
Safety Standard	Complies to EN 50178	
Harmonic Standard	According to EN 61000-3-4, IEEE 519	
Design Standard	According to EN 60146	
Frame Dimension (WxDxH)	Maxi Frame : 600 x 900 x 1950 mm, Midi Frame : 600 x 900 x 1500 mm	
Protection Index	IP21 (Modules & Frame), other IP options available on demand	

Enersine™ Maxi Frame, Max. 480A , 6Nos. x 80A PM

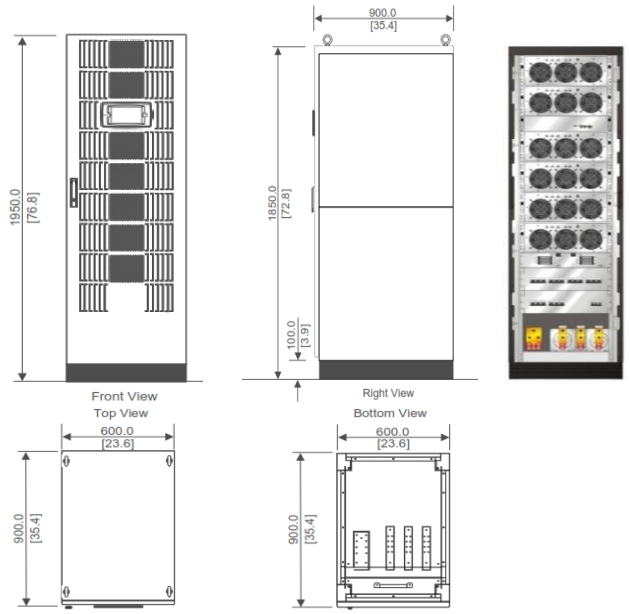

Enersine™ Midi Frame, Max. 320A , 4Nos. x 80A PM

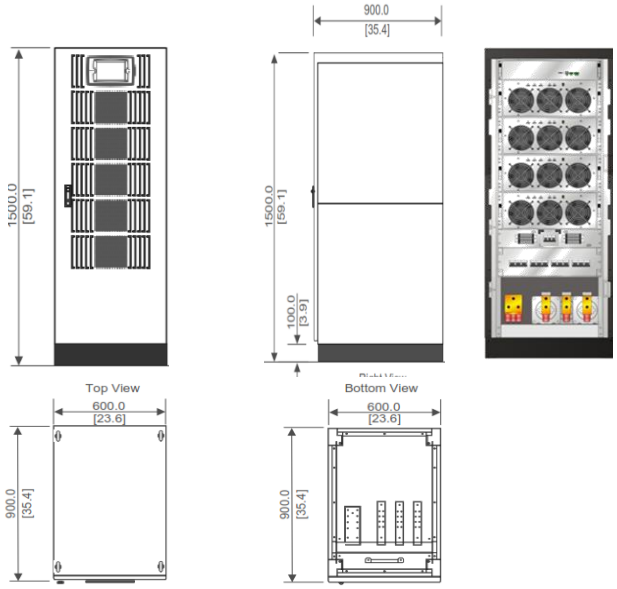

Our Organization

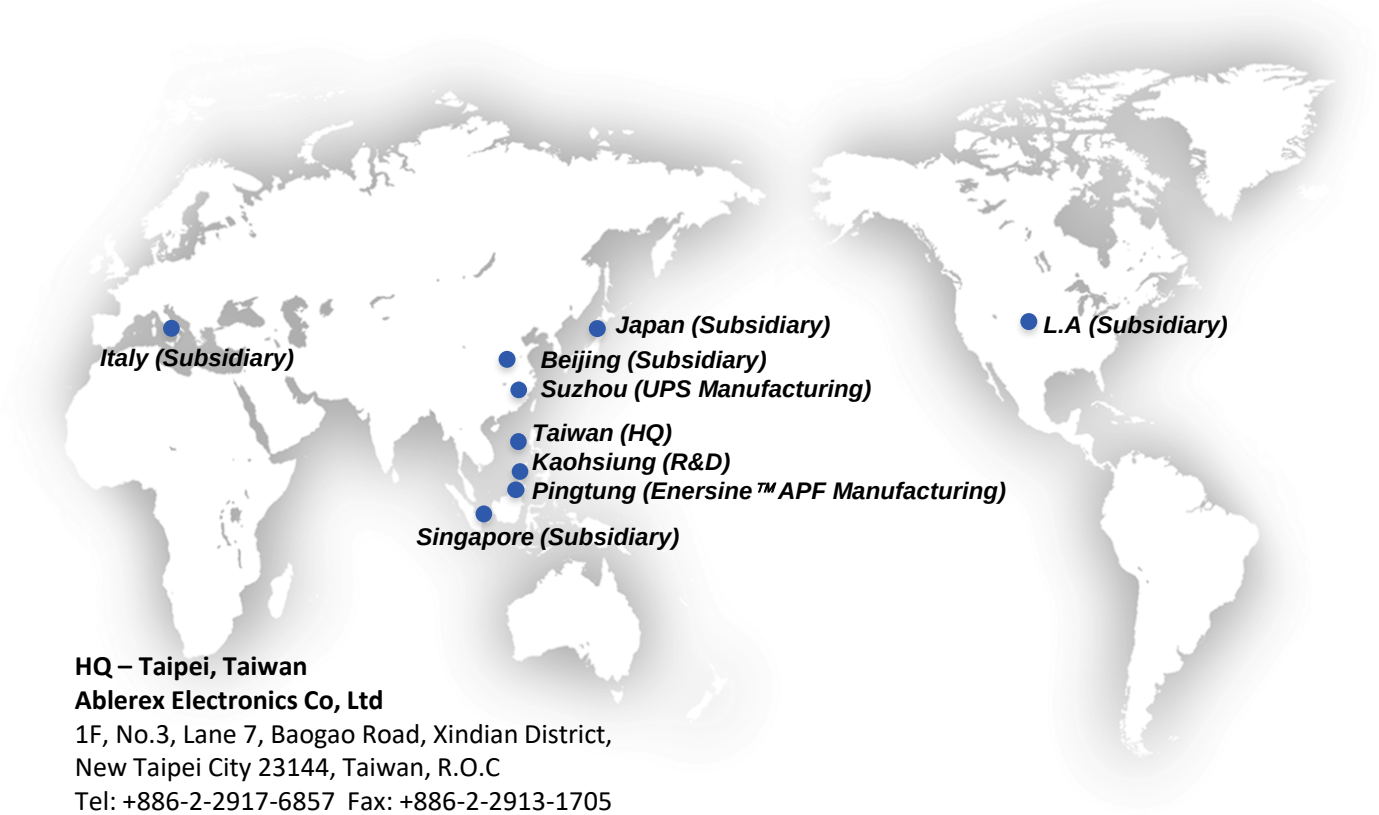

HQ – Taipei, Taiwan
Ablerex Electronics Co, Ltd
1F, No.3, Lane 7, Baogao Road, Xindian District,
New Taipei City 23144, Taiwan, R.O.C
Tel: +886-2-2917-6857 Fax: +886-2-2913-1705
http://www.ablerex.com.tw

Marketing & Service

Singapore Subsidiary
Ablerex Electronics (S) Pte Ltd
No. 23 New Industrial Road #05-03
Solstice Business Center Singapore 536209
Tel: +65 6282 6535 Fax: +65 6282 6343
http://www.ablerex.com.sg
Email: sales@ablerex.com.sg

China Subsidiary
Ablerex Electric (Beijing) Co., Ltd.
A-9C1 Golden Resources Business Center,
No.2 East Road, LanDianChang
HaiDian District, Beijing, China
Tel: +86-10-8886-5103

Italy Subsidiary
Ablerex Electronics Italy srl
Viale Milanofiori – Strada 6, Palazzo N1
20089 Rozzano (MI)
Tel: +39 0444323061

USA Subsidiary
Ablerex Corporation
1175 South Grove Ave. Suite 103
Ontario, CA 91761 USA
Tel: +1-909-930-0201

Japan Subsidiary
WADA DENKI Co.,Ltd
1-7-10, Ningyocho, Nihonbashi, Chuo-ku, Tokyo
Tel: +81-3-6661-6447

R&D Centre - Kaohsiung, Taiwan
Ablerex Electronics Co., Ltd.
No. 157, Shuiyuan Rd., Sanmin District
Kaohsiung City 80766, Taiwan

Manufacturing Plant

Ablerex Electronics Co., Ltd
No.1-1 Gongye Road., Pingtung City,
Pingtung County 90049, Taiwan, R.O.C

Ablerex Electronics (Suzhou) Co.,Ltd
No. 36 Wang Wu Road, Wu Zhong District
Suzhou, 215128 P.R. China
Tel: +86-512-6525 0225